Wilhelm Hoffmeister GmbH + Co KG, Hueckerstr. 19, 32257 Bünde

# Spüle-Unterschrank

**Nr. 402 Rev.00**

0 1 2 3 4cm

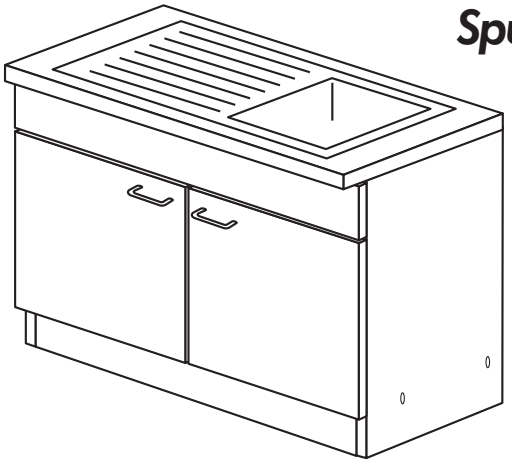

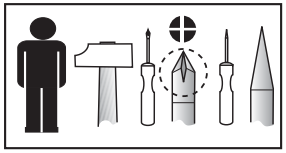

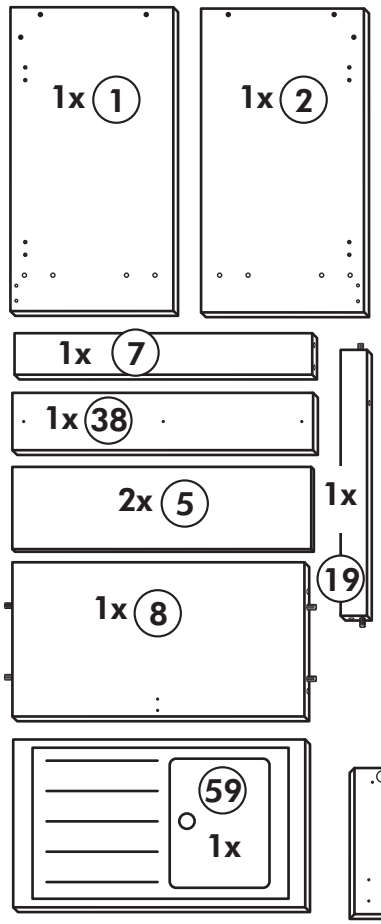

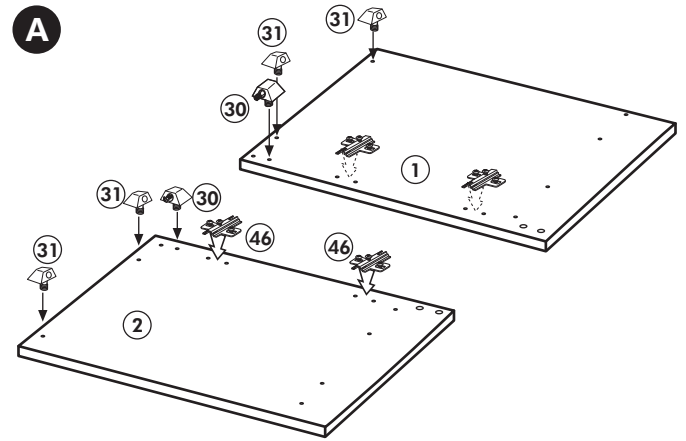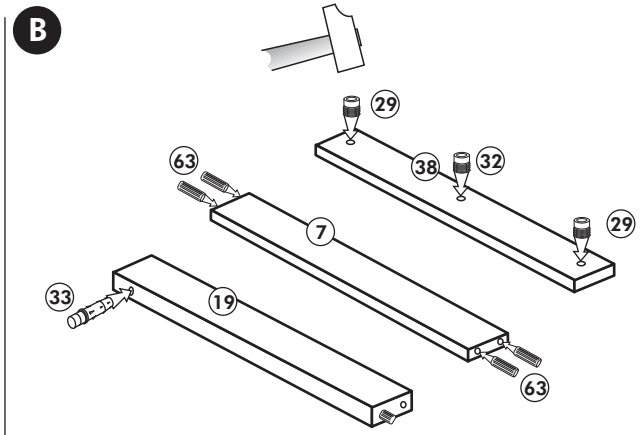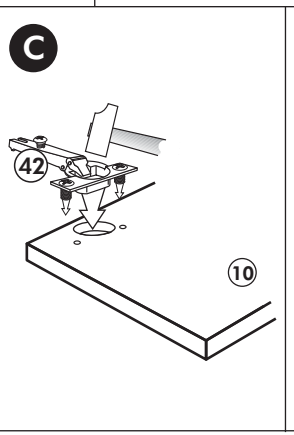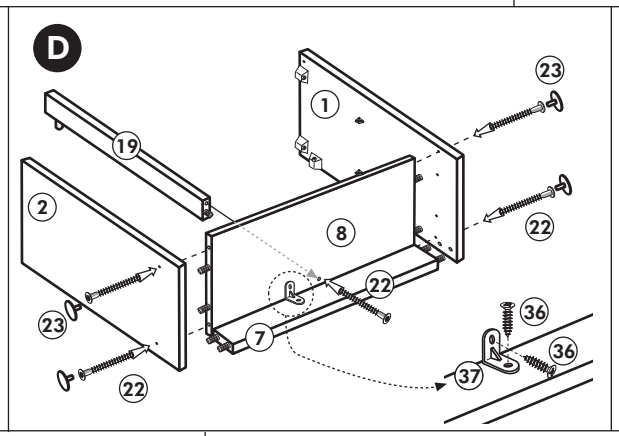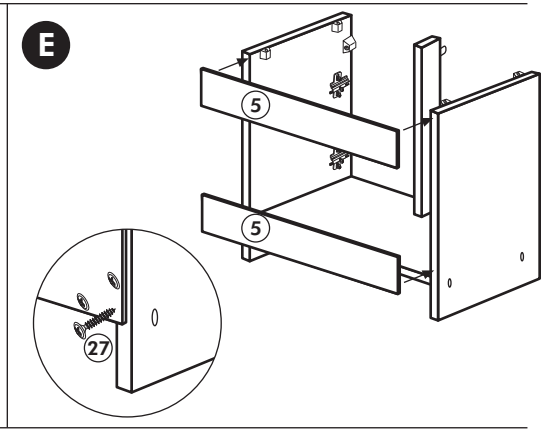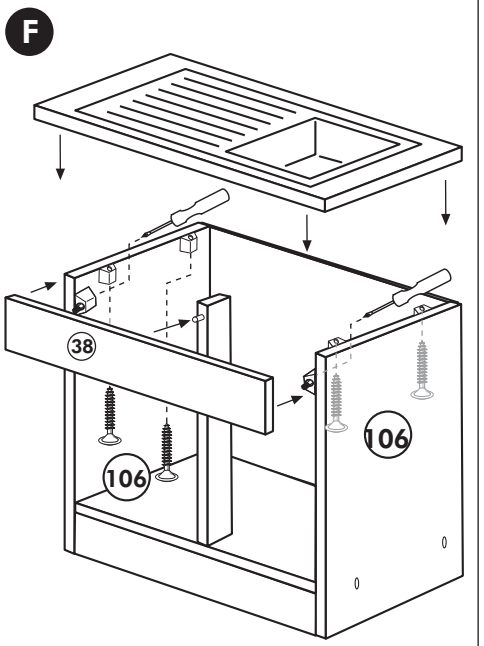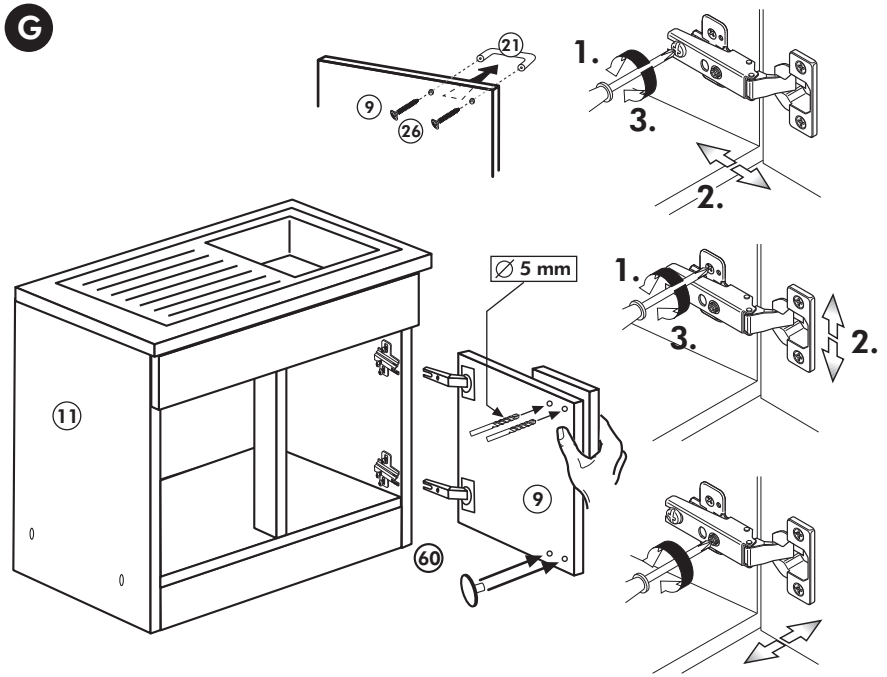
| | | | |
|---|---|---|---|
| 106 | 4x | 4,0 x 30 | |
| 37 | 1x | 30 | 2x |
| 36 | 2x | 3,5 x 15 | |
| 29 | 2x | ∅ 10 | |
| 32 | 1x | ∅ 12 | |
| 22 | 5x | | |
| 23 | 4x | ∅ 3 | |
| 26 | 4x | 4,0 x 30 M4 | |
| 46 | 4x | 31 | 4x |
| 42 | 4x | 60 | 4x ∅ 5 |
| 63 | 4x | 8 x 30 | |
| 27 | 24x | 3,0 x 20 | |
| 21 | 2x | | |
| 33 | 1x | | |